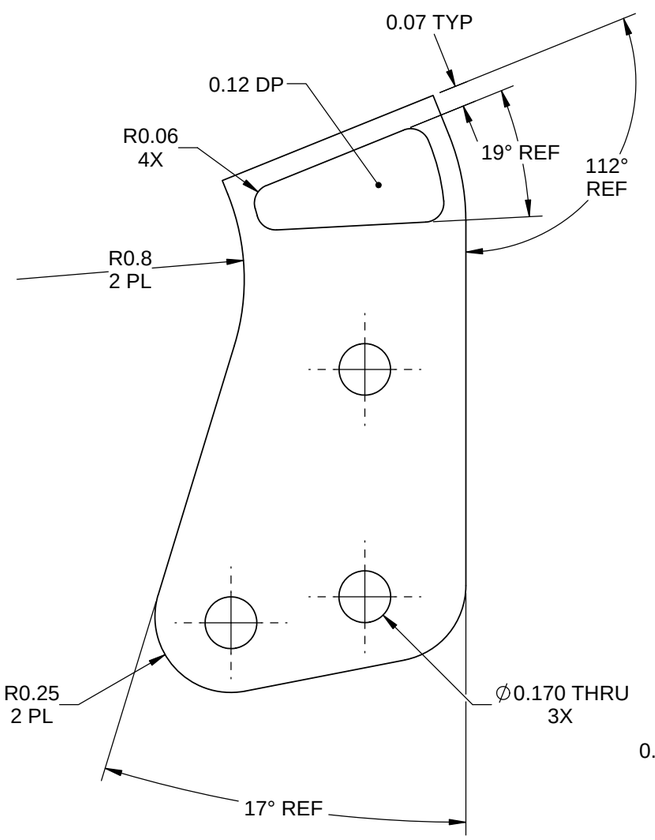

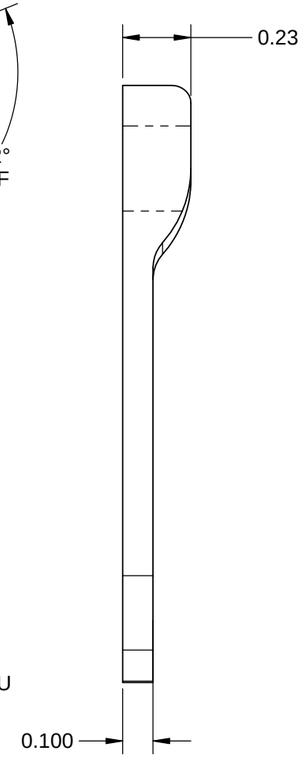

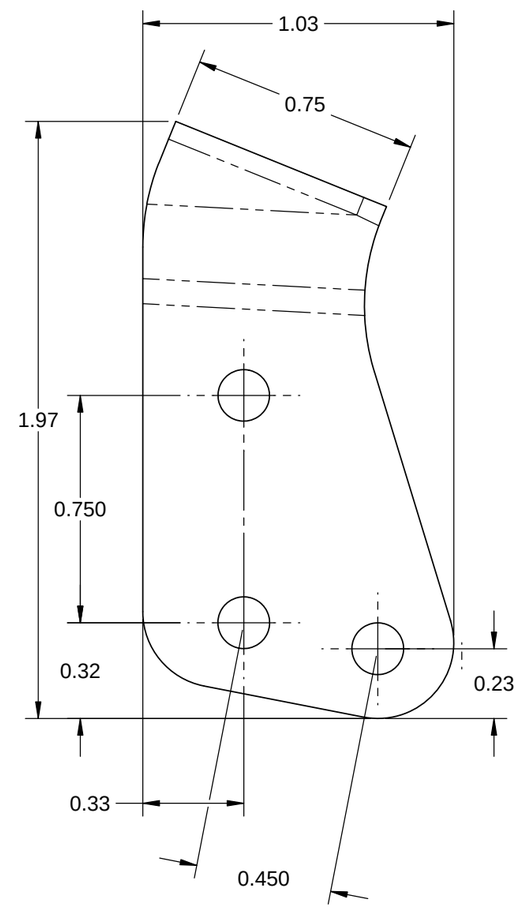

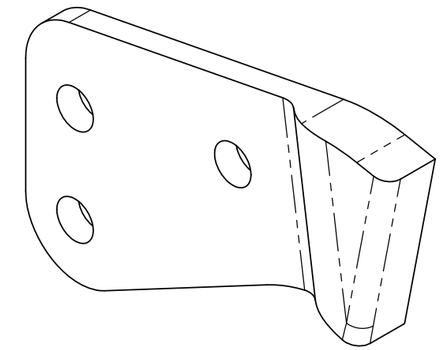

PRELIMINARY A1
11.12.06 (RP)

D4493-1 HINGE FORK

NOTES:
1) MATERIAL: AISI STAINLESS STEEL PER ASTM A582.
REF. DART SPEC M303B
2) FINISH: NONE
3) TOLERANCES: PER DART QSI 018 UNLESS OTHERWISE NOTED
4) UNITS: INCHES UNLESS OTHERWISE NOTED
5) BREAK SHARP EDGES: 0.005 TO 0.010 MAX
6) IDENTIFICATION: INDENTIFY PER QSI044 6.1
7) WEIGHT: 0.05 lbs

REV.	DESCRIPTION	BY	DATE
PA1	PRELIMINARY	RO	11.12.06

DESIGN	RP	DART AEROSPACE LTD HAWKESBURY, ONTARIO, CANADA
DRAWN	RP	
CHECKED	AS	DRAWING NO. D4493 — REV. PA1
MFG. APPR.	JLM	SHEET 1 OF 2
APPROVED		TITLE: HINGE FORK — SCALE: NTS
DE APPR.		
DATE	11.12.06	

COPYRIGHT © 2010 BY DART AEROSPACE LTD
THIS DOCUMENT IS PRIVATE AND CONFIDENTIAL AND IS SUPPLIED ON THE EXPRESS CONDITION THAT IT IS NOT TO BE USED FOR ANY PURPOSE OR COPIED OR COMMUNICATED TO ANY OTHER PERSON WITHOUT WRITTEN PERMISSION FROM DART AEROSPACE LTD.

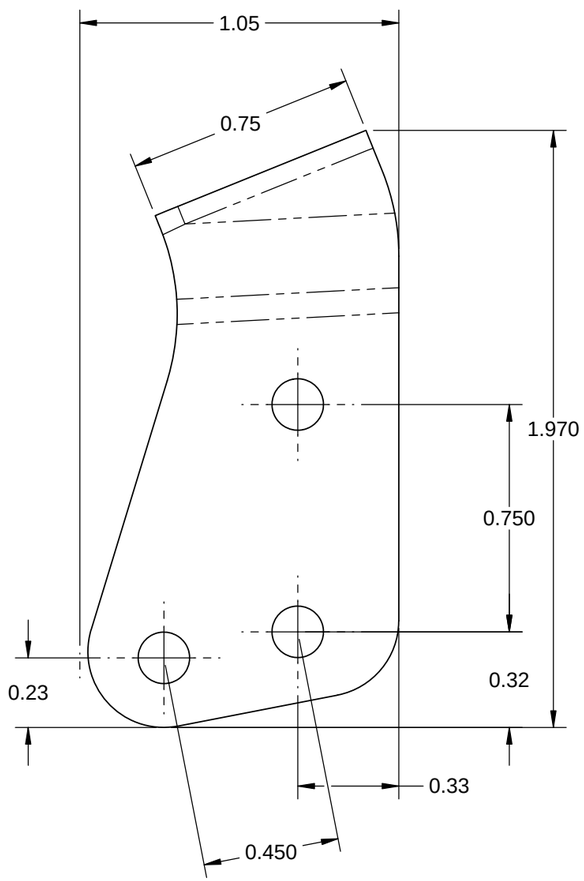

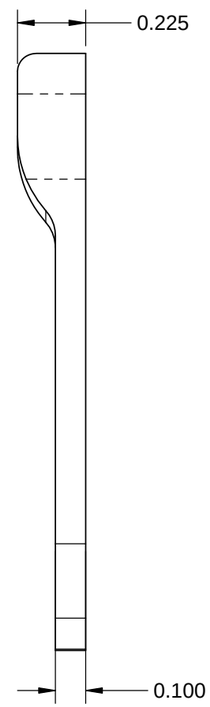

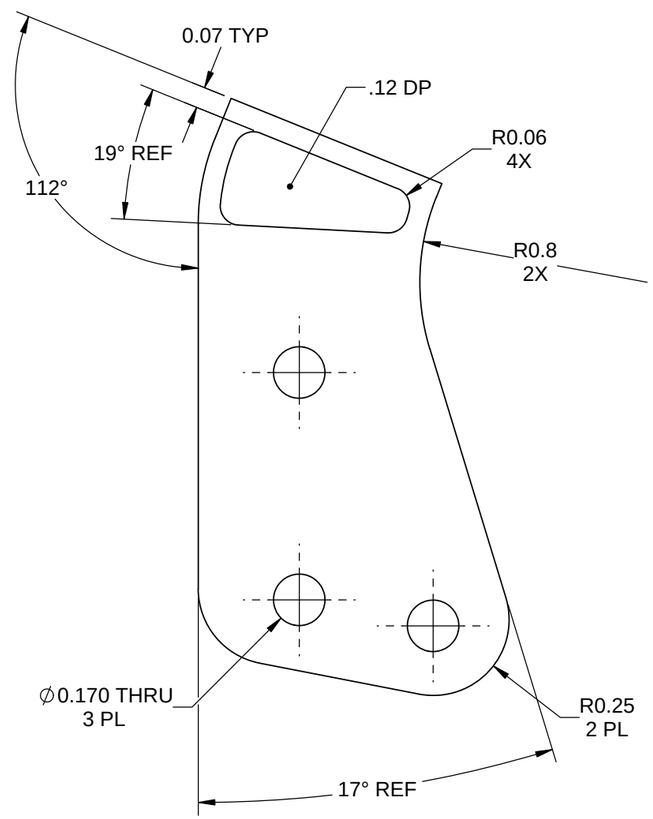

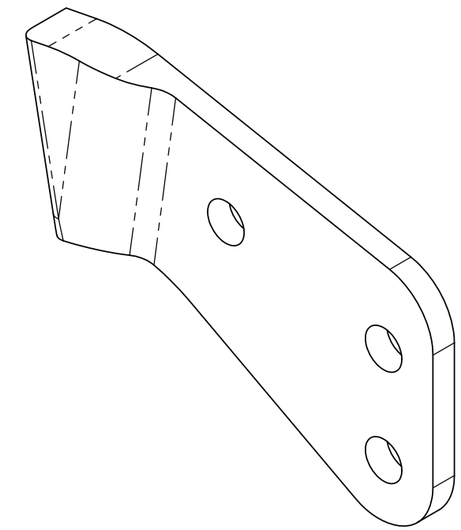

PRELIMINARY A1
11.12.06 (RP)

D4493-3 HINGE FORK

NOTES:
1) MATERIAL: AISI STAINLESS STEEL PER ASTM A582.
REF. DART SPEC M303B
2) FINISH: NONE
3) TOLERANCES: PER DART QSI 018 UNLESS OTHERWISE NOTED
4) UNITS: INCHES UNLESS OTHERWISE NOTED
5) BREAK SHARP EDGES: 0.005 TO 0.010 MAX
6) IDENTIFICATION: INDENTIFY PER QSI044 6.1
7) WEIGHT: 0.05 lbs

DESIGN	RP	**DART AEROSPACE LTD** HAWKESBURY, ONTARIO, CANADA
DRAWN	RP	
CHECKED	AS	DRAWING NO. D4493 — REV. PA1 — SHEET 2 OF 2
MFG. APPR.	JLM	
APPROVED		TITLE HINGE FORK — SCALE NTS
DE APPR.		
DATE	11.12.06	

COPYRIGHT © 2010 BY DART AEROSPACE LTD
THIS DOCUMENT IS PRIVATE AND CONFIDENTIAL AND IS SUPPLIED ON THE EXPRESS CONDITION THAT IT IS NOT TO BE USED FOR ANY PURPOSE OR COPIED OR COMMUNICATED TO ANY OTHER PERSON WITHOUT WRITTEN PERMISSION FROM DART AEROSPACE LTD.